Medical Box PC

New

HTB-100-HM170

Fanless Quad Core Box PC

Features

- Medical grade with high performance fanless embedded computing
- 6th Gen Intel® Core™ processor platform with Intel® HM170 chipset and DDR4 memory
- Triple independent display with high resolution support
- Isolated COM ports for enhancing safety among devices
- Optional PCIe x16 expansion slot supports more flexible functions

Smart & Friendly Design! HTB-100 brings you more satisfaction

Isolated COM ports, rich I/O interface, and multiple expansions are built in to the HTB-100. The intelligent HTB-100 medical computing system will meet all demands from the medical applications.

• Compliant with medical standards

The HTB-100 is compliant with medical standards, including IEC 60601-1 V3.1, IEC 60601-1-2 V4.0, IEC 62304, IEC 62366, ISO 14971 and FCC part 18 class B, making the medical environment more reliable.

• Flexible expansion

The flexible expansion is one of the advantages of the HTB-100 for medical applications. The HTB-100 reserves a PCIe x16 slot for add-on card expansions, such as capture card for medical imaging inspection during surgery.

• Waterproof top cover

The HTB-100 is equipped with a waterproof top cover in order to prevent any damage from cleaning or liquid which may indirectly affect patients. The HTB-100 can meet flat design and reduce maintenance effort.

• Cable cover for easy cabling

The cable cover protects the HTB-100 from dust and liquid ingress, and allows the medical staff to easily manage all the cables from the I/O ports, making the cleaning process more convenient in medical environment.

Powerful system design capability with innovative technology

• Ground pin to prevent harm to patients and medical staffs

The perfect grounding pin design can avoid current from the HTB-100 to vital devices which connect to patients, and to avoid the current damage from other devices.

• Easy mounting design

Various mounting methods such as desktop and wall mount are supported for easy use in medical environment. The provided flexible mounting bracket can be oriented 180 degrees to change from desktop to wall mount.

Specifications

Model		HTB-100-HM170
Chassis	Color	Silver+Greyish blue
	Dimensions (WxDxH)	294 x 209 x 90.2
	System Fan	Fanless
	Chassis Construction	Extruded aluminum alloy
Motherboard	CPU	Intel® Core™ i7-6822EQ (2 GHz, quad-core, TDP=25) Intel® Core™ i5-6442EQ (1.9 GHz, quad-core, TDP=25)
	Chipset	Intel® HM170
	System Memory	2 x 260-pin DDR4 SO-DIMM, one 4 GB pre-installed (system max: 32GB)
Storage	Hard Drive	1 x 2.5" SATA 6Gb/s HDD/SSD bay
I/O Interfaces	USB 3.0	4
	USB 2.0	2
	Ethernet	2 x RJ-45 PCIe GbE by Intel® I211 controller
	COM Port	2 x RS-232 (DB-9, with 4 kV isolation) 2 x RS-232/422/485 (DB-9, with 4 kV isolation)
	Display	1 x VGA, 1 x HDMI 2.0, 1 x iDP (optional)
	Resolution	VGA: Up to 1920 x 1200@60HZ HDMI 2.0: Up to 4096 x 2160@60Hz
	Audio	Realtek ALC662, 5.1-channel High Definition Audio (HDA), Line-in, Line-out, Mic-in
	Wireless	1 x 802.11a/b/g/n/ac 2T2R (optional)
Expansions	PCIe	1 x PCIe x16
	PCIe Mini	1 x Half-size PCIe Mini 1 x Full-size PCIe Mini (supports mSATA, colay with SATA)
	M.2	1 x M.2 (A & E key)
Power	Power Input	DC Jack: 12~28V DC
	Power Consumption	19V@4.4A (Intel® Core™ i7-6822EQ with 4 GB memory)
Reliability	Mounting	Wall mounting
	Operating Temperature	0°C ~ 40°C with air flow (SSD), 10% ~ 95%, non-condensing
	Storage Temperature	-40°C ~ 70°C with air flow (SSD), 10% ~ 90%, non-condensing
	Operating Shock	Half-sine wave shock 5G; 11ms; 100 shocks per axis
	Operating Vibration	MIL-STD-810G 514.6 C-1 (with SSD)
	Safety / EMC	CE, FCC class B part 18, IEC 60601-1 V3.1, IEC 60601-1-2 V4.0, IEC 62304, ISO 14971
OS	Supported OS	Microsoft® Windows 8, Microsoft® Embedded Standard 7

Ordering Information

Part No.	Description
HTB-100-HM170-i5/4G-R10	Ruggedized fanless embedded system with Intel® Core™ i5-6442EQ 1.9 GHz (up to 2.7 GHz, quad core, TDP 25W), 4GB DDR4 pre-installed memory, one PCIe x16 expansion, VGA/HDMI/iDP, COM port, 12~28V DC, RoHS
HTB-100-HM170-i7/4G-R10	Ruggedized fanless embedded system with Intel® Core™ i7-6822EQ 2.0 GHz (up to 2.8 GHz, quad core, TDP 25W), 4GB DDR4 pre-installed memory, one PCIe x16 expansion, VGA/HDMI/iDP, COM port, 12~28V DC, RoHS

Options

Part No.	Description
63040-580120-000-RS	Adapter Power, Darfon, H1120-B0, BK.1HB2J3001, Active PFC, Vin:90~264VAC, 120W, 1200mm, MEDICAL, Vout:19VDC, Din 4Pin/lock, CCL, RoHS
32702-000200-100-RS	POWER CORD;EUROPEAN CODE(VDE)

Packing List

1 x Utility CD	1 x Chassis Screw	1 x One Key Recovery CD	1 x Mounting Bracket

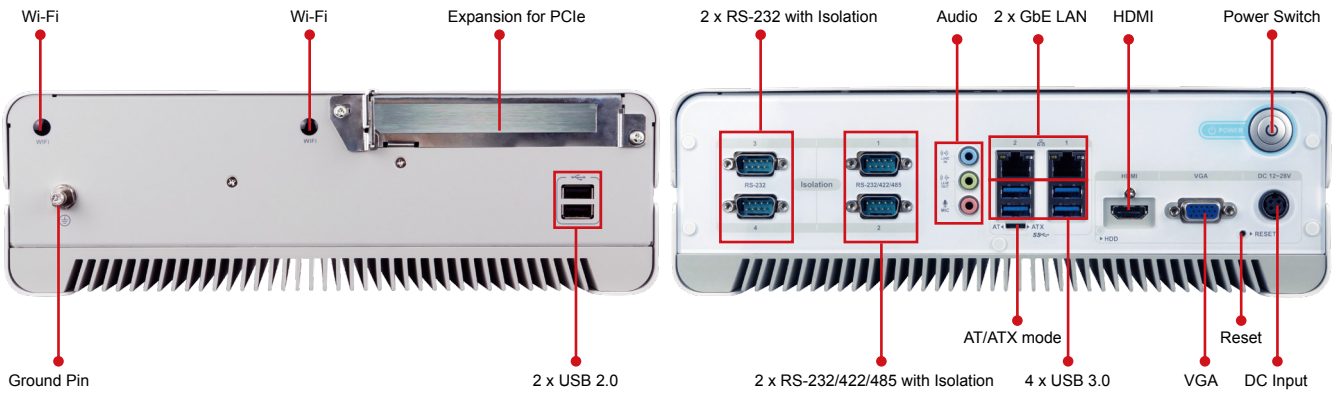
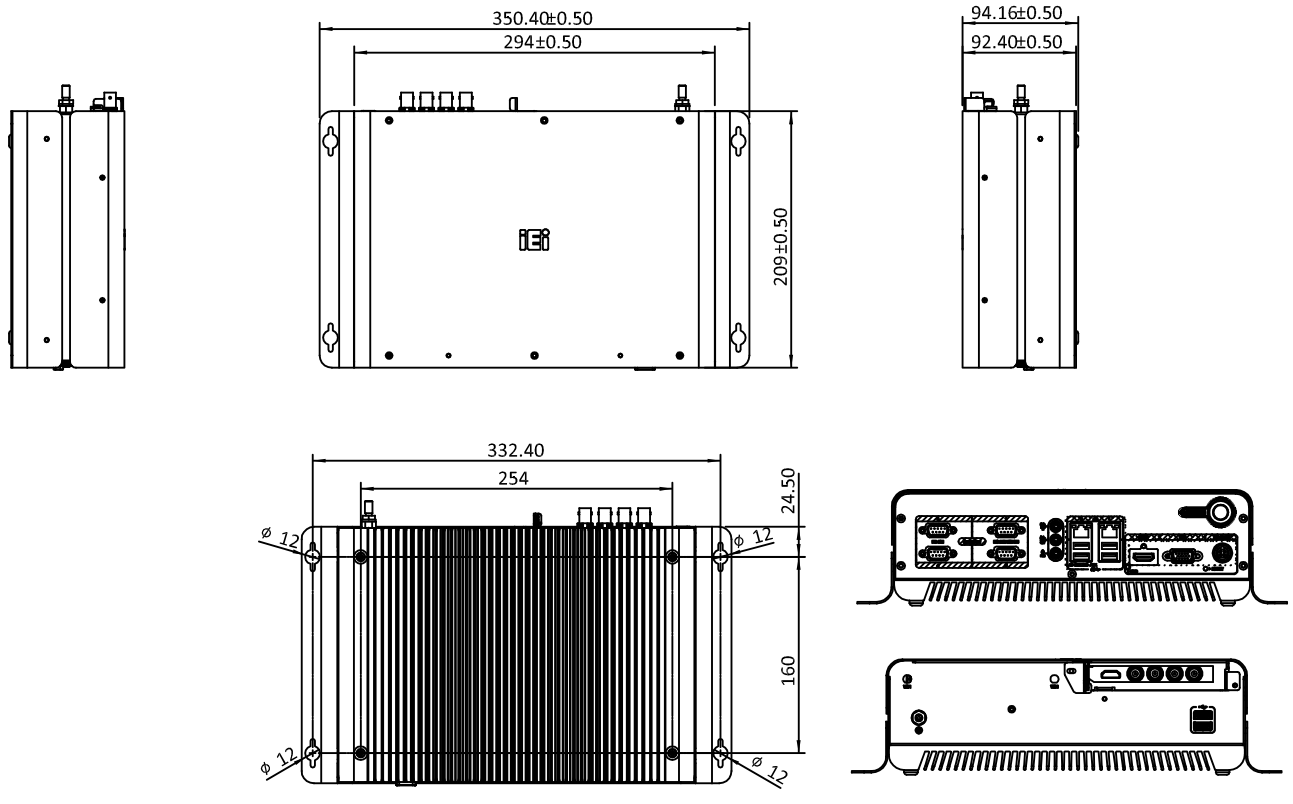
HTB-100-HM170 Dimensions (Unit: mm)