H.264 Hardware Compression Video Capture Product Selection Guide

1080p30 Full HD

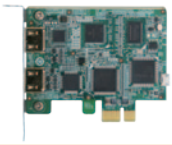
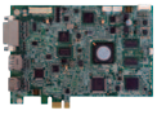

Products	HDC-301MS	HDC-301EL	HDC-701EL New	HDB-301L
◆ Input				
Video Input Channel	1 channel			
Video Input Type	HDMI		HDMI/DP/DVI/YPbPr	HDMI
Audio Input Channel	1 channel			
Audio Input Type	HDMI (stereo)			
◆ No Delay Passthrough				
Video Output Channel	None	1 channel (1080p60)		
Video Output Type	None	HDMI		
Audio Output Channel	None	1 channel		
Audio Output Type	None	HDMI (stereo)		
◆ Pc Interface				
Type	PCIe Mini	PCIe x1	PCIe x1	USB 2.0
◆ Video Processing				
Hardware Encoder	H.264/AVC High Profile Level 4.1			
Recording Datarate	up to 30Mbps			
Video Input Resolution	1920 x 1080 24p/25p/30p/50p/60p 1920 x 1080 60i/59.94i/50i 1280 x 1024 30p 1280 x 800 60p 1280 x 768 60p 1280 x 720 50p/60p 1024 x 768 60p 800 x 600 60p 720 x 576 50p 720 x 480 60p 640 x 480 60p			
Recording Formats	1920 x 1080 24p/25p/30p 1280 x 1024 30p 1920 x 1080 24p/25p/30p 1280 x 800 60p 1280 x 720 50p/60p 1024 x 768 60p 800 x 600 60p 720 x 576 50p 720 x 480 60p 640 x 480 60p			
◆ Audio Processing				
Audio Sampling Frequencies	44.1k, 48k Hz			
Audio Compression	MPEG4-AAC			
Recording Datarate	128kbps			
◆ Functionality				
Multiple Card Support	8 channels			
Scaling	video scaling down compression		video scaling support, OSD, PIP	video scaling down compression
◆ Others				
Dimensions	51 x 30 (mm)	83.8 x 68.9 (mm)	155 x 111 (mm)	89 x 74.83 x 21.6 (mm)
Operation Tempeture	0°C - 60°C (32°F - 140°F), non-condensing			
Power Consumption	3W	4.5W	15W	4.5W
◆ Software Support				
Device Driver	Windows 7 32-bit Windows 7 64-bit Linux: Ubuntu 10.04 (kernel 2.6.35)			
Sdk	Provide SDK and Demo program			

H.264 Hardware Compression Video Capture Product Selection Guide

1080p60 Full HD

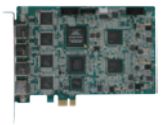
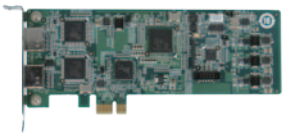
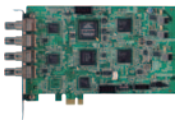

Products	HDC-304E	HDC-302E	HDC-301E	HDC-502E
◆ Input				
Video Input Channel	4 channels	2 channels	1 channel	2 channels
Video Input Type	HDMI	HDMI	HDMI	SDI
Audio Input Channel	4 channels	2 channels	1 channel	2 channels
Audio Input Type	HDMI (stereo)	HDMI (stereo)	HDMI (stereo)	SDI
◆ No Delay Passthrough				
Video Output Channel	1 channel (1080p60)	2 channels	1 channel	2 channels
Video Output Type	HDMI output cable kit	HDMI	HDMI	SDI
Audio Output Channel	1 channel	2 channels	1 channel	2 channels
Audio Output Type	HDMI output cable kit	HDMI	HDMI	SDI
◆ Pc Interface				
Type	PCIe x1	PCIe x1	PCIe x1	PCIe x1
◆ Video Processing				
Hardware Encoder	H.264/AVC High Profile Level 4.2			
Recording Datarate	2Mbps ~ 20Mbps			
Video Input Resolution	1920 x 1080 60p / 59.94p / 50p 1920 x 1080 60i / 59.94i / 50i 1280 x 720 60p / 59.94p / 50p 720 x 480 60i / 59.94i 720 x 576 50i			1920 x 1080 60p / 50p / 30p / 25p /24p 1920 x 1080 60i / 50i 1280 x 720 60p / 50p / 30p / 25p /24p 720 x 480 60i 720 x 576 50i
Recording Formats	1920 x 1080 60p / 59.94p / 50p 1920 x 1080 60i / 59.94i / 50i 1280 x 720 60p / 59.94p / 50p 720 x 480 60i / 59.94i 720 x 576 50i			1920 x 1080 60p 1280 x 720 60p
◆ Audio Processing				
Audio Sampling Frequencies	44.1k, 48k Hz			
Audio Compression	MPEG-1 Audio Layer 2			
Recording Datarate	256kbps			
◆ Functionality				
Multiple Card Support	YES			
Scaling	NA			
◆ Others				
Dimensions	230 x 116 (mm)	155 x 98.6 (mm)	168 x 69 (mm)	188 x 125 (mm)
Operation Tempeture	0°C - 65°C (32°F - 140°F), non-condensing			
Power Consumption	12.7W	9.53W	6.07W	14.2W
◆ Software Support				
Device Driver	Windows 7 32-bit Windows 7 64-bit Linux: Fedora 17 (kernel 3.3.4-5)			
Sdk	**Provide SDK and Demo program**			

HDC-304E

PCI Express video/audio capture card with four HDMI input channels and one HDMI output channel, 1920x1080@60p, and H.264 hardware codec

H.264 Hardware Codec

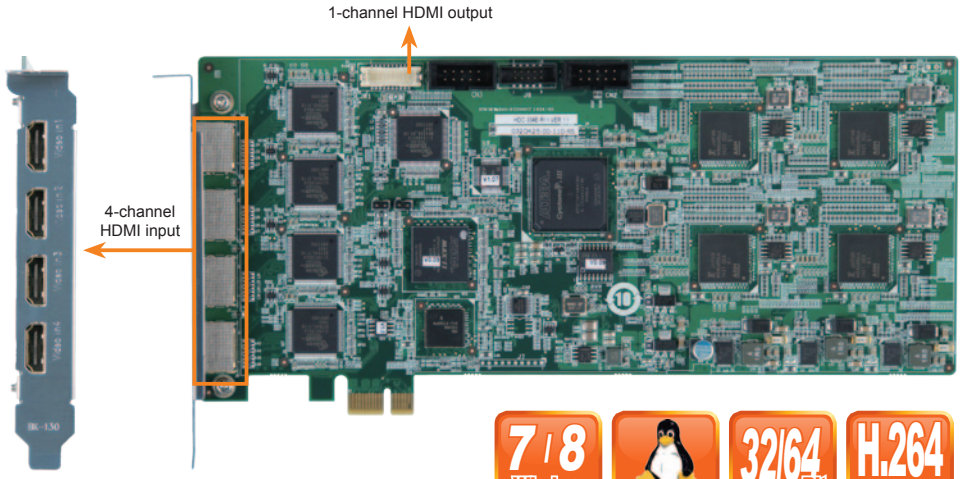

HDMI output cable

Features

- Compatible with Windows XP, Windows 8, Windows 7 and Linux
- Equipped with four HDMI input ports
- Encoding or decoding up to 1080p HD video
- Pass through for transmitting uncompressed video up to 1080p resolution
- Reduces the amount of hard disk space needed by real-time H.264 recording compression capability
- Enables the system to support up to 8-channel input by adding multiple video capture cards
- SDK available for customer to create customized applications
- PCI Express interface provides higher bandwidth and great performance

System Block

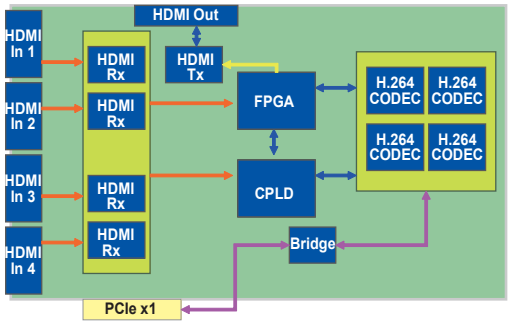

Specifications

◆ Interface

Video Input	4 channels
Video Input type	HDMI
Audio Input	4 channels
Audio Input Type	HDMI
Video Output	1 channel
Video Output Type	HDMI output cable kit
Audio Output	1 channel
Audio Output Type	HDMI output cable kit
Bus Interface	PCIe x1
Loop Through	1 channel

◆ Video Processing

Video Compression	H.264/AVC High Profile Level 4.2
Input Resolution & Frame Rate	1920 x 1080 x 60p / 59.94p / 50p 1920 x 1080 x 60i / 59.94i / 50i 1280 x 720 x 60p / 59.94p / 50p 720 x 480 x 60i / 59.94i 720 x 576 x 50i
Record Resolution / Frame Rate / Bit Rate	1920 x 1080 x 60p / 59.94p / 50p, encoding video bit rate from 6Mbps to 20Mbps 1920 x 1080 x 60i / 59.94i / 50i, encoding video bit rate from 6Mbps to 20Mbps 1280 x 720 x 60p / 59.94p / 50p, encoding video bit rate from 4Mbps to 20Mbps 720 x 480 x 60i / 59.94i, encoding video bit rate from 2Mbps to 10Mbps 720 x 576 x 50i, encoding video bit rate from 2Mbps to 10Mbps

◆ Functionality

Multiple Card Support	Yes

◆ Audio Processing

Audio Compression	MPEG-1 Audio Layer 2
Bit Rate	256k

◆ System Requirement

System	x86 PC compatible computer, Intel® Pentium® 4 2.0GHz or above for video record Recommends using a DXVA or CUDA capable graphics card for real-time video playback
Memory	1GB or more
OS Environment	Microsoft Windows XP Service Pack 2 (SP2) (32-bit version) Microsoft Windows 7 (32-bit/64-bit) Microsoft DirectX 9.0c Microsoft .NET Framework 2.0 Linux Fedora 17 Kernel 3.3.4-5 (32-bit/64-bit)

◆ Software Support

Device Driver	Compatible with Windows XP, Windows 7, Linux Fedora 17 Kernel 3.3.4-5
SDK	Windows: Provides SDK and demo program with sample source code in C# Linux: Provides SDK and driver/demo program with sample source code in C

◆ Others

Dimensions	230 mm x 116 mm
Operating Temperature	0°C ~ 65°C, non-condensing
Power Consumption	12.7W (12V@0.61A, 3.3V@1.63A)

Packing List

1 x HDC-304E capture card	
1 x HDMI output kit	
1 x Utility CD	1 x QIG

Ordering Information

Part No.	Description
HDC-304E-R11	PCI Express video/audio capture card with four HDMI input channels,1920x1080@60p, and H.264 hardware codec

HDC-302E

PCI Express video/audio capture card with two HDMI input channels and two HDMI output channels, 1920x1080@60p, and H.264 Hardware Codec

H.264 Hardware Codec

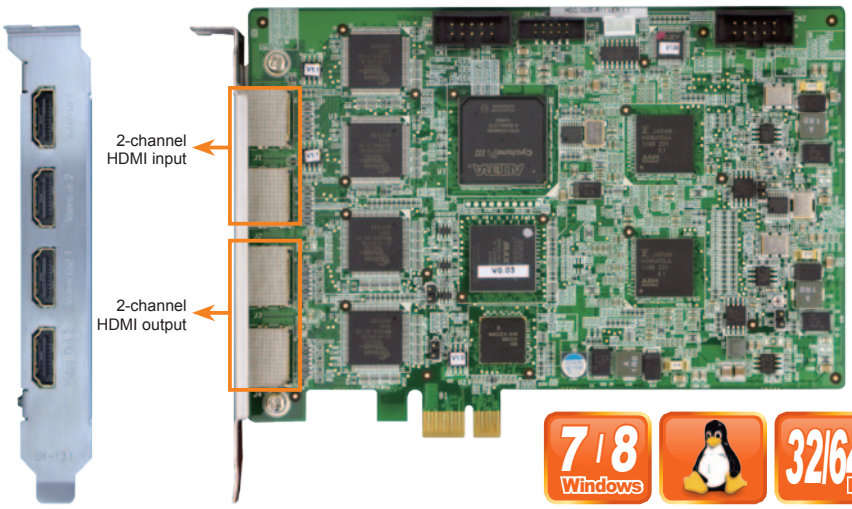

Features

- Compatible with Windows XP, Windows 8, Windows 7 and Linux
- Equipped with two HDMI input ports
- Encoding or decoding up to 1080p HD video
- Pass through for transmitting uncompressed video up to 1080p resolution
- Captures or records HD video in H.264 format
- Playbacks the recordings on HDMI display
- SDK available for customer to create customized applications

System Block

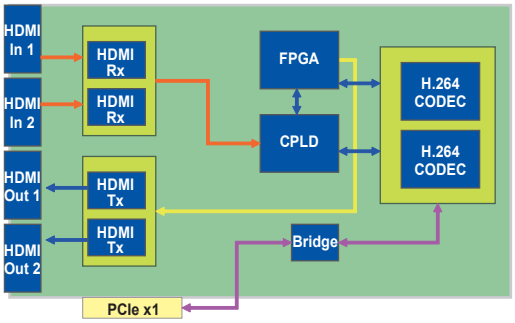

Specifications

◆ Interface

Video Input	2 channels
Video Input Type	HDMI
Audio Input	2 channels
Audio Input Type	HDMI
Video Output	2 channels
Video Output Type	HDMI
Audio Output	2 channels
Audio Output Type	HDMI
Bus Interface	PCIe x1
Loop Through	2 channels

◆ Video Processing

Video Compression	H.264/AVC High Profile Level 4.2
Input Resolution & Frame Rate	1920 x 1080 x 60p / 59.94p / 50p 1920 x 1080 x 60i / 59.94i / 50i 1280 x 720 x 60p / 59.94p / 50p 720 x 480 x 60i /59.94i 720 x 576 x 50i
Record Resolution / Frame Rate / Bit Rate	1920 x 1080 x 60p / 59.94p / 50p, encoding video bit rate from 6Mbps to 20Mbps 1920 x 1080 x 60i / 59.94i / 50i, encoding video bit rate from 6Mbps to 20Mbps 1280 x 720 x 60p / 59.94p / 50p, encoding video bit rate from 4Mbps to 20Mbps 720 x 480 x 60i / 59.94i, encoding video bit rate from 2Mbps to 10Mbps 720 x 576 x 50i, encoding video bit rate from 2Mbps to 10Mbps

◆ Functionality

Multiple Card Support	4 cards, 8 channels

◆ Audio Processing

Audio Compression	MPEG-1 Audio Layer 2
Bit Rate	256k

◆ System Requirement

System	x86 PC compatible computer, Intel® Pentium® 4 2.0GHz or above for video record Recommends using a DXVA or CUDA capable graphics card for real-time video playback
Memory	1GB or more
OS Environment	Microsoft Windows XP Service Pack 2 (SP2) (32-bit version) Microsoft Windows 7 (32-bit/64-bit) Microsoft DirectX 9.0c Microsoft .NET Framework 2.0 Linux Fedora 17 Kernel 3.3.4-5 (32-bit/64-bit)

◆ Software Support

Device Driver	Compatible with Windows XP, Windows 7, Linux Fedora 17 Kernel 3.3.4-5
SDK	Windows: Provides SDK and demo program with sample source code in C# Linux: Provides SDK and driver/demo program with sample source code in C

◆ Others

Dimensions	155 mm x 98.6 mm
Operating Temperature	0°C ~ 65°C, non-condensing
Power Consumption	9.53W (12V@0.46A, 3.3V@1.21A)

Packing List

1 x HDC-302E
1 x Utility CD
1 x QIG

Ordering Information

Part No.	Description
HDC-302E-R11	PCI Express video/audio capture card with two HDMI input channels and two HDMI output channels, 1920x1080@60p, and H.264 Hardware Codec

HDC-301E

PCI Express video/audio capture card with one HDMI input channel and one HDMI output channel, 1920x1080@60p, and H.264 Hardware Codec

H.264 Hardware Codec

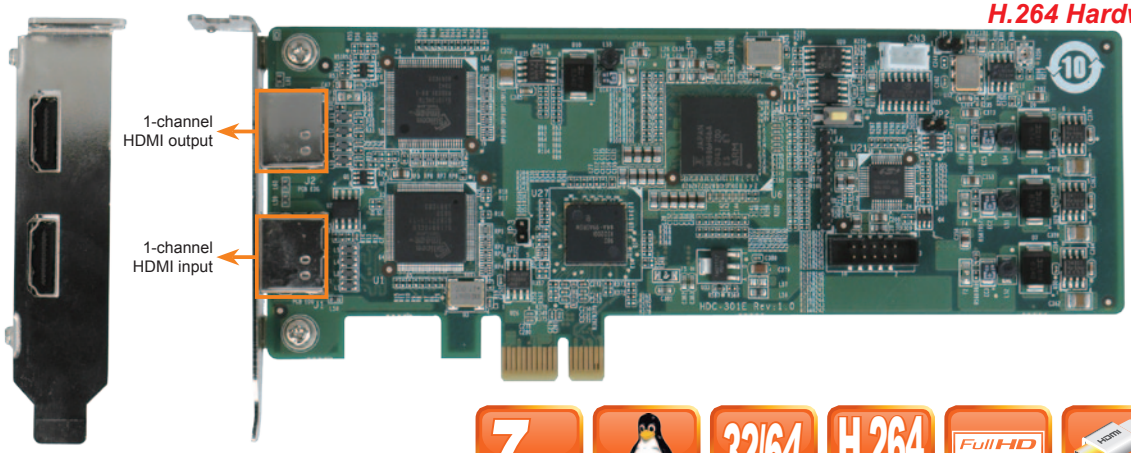

Features

- Compatible with Windows XP, Windows 7 and Linux
- Equipped with one HDMI input port
- Encoding or decoding up to 1080p HD video
- Pass through for transmitting uncompressed video up to 1080p resolution
- Captures or records HD video in H.264 format
- Playbacks the recordings on HDMI display
- SDK available for customer to create customized applications

System Block

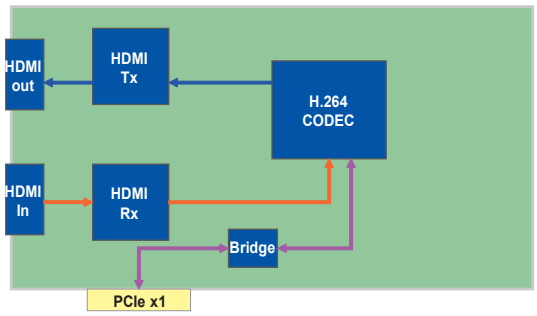

Specifications

◆ Interface

Video Input	1 channel
Video Input type	HDMI
Audio Input	1 channel
Audio Input Type	HDMI
Video Output	1 channel
Video Output Type	HDMI
Audio Output	1 channel
Audio Output Type	HDMI
Bus Interface	PCIe x1
Loop Through	1 channel

◆ Video Processing

Video Compression	H.264/AVC High Profile Level 4.2
Input Resolution & Frame Rate	1920 x 1080 x 60p / 59.94p / 50p 1920 x 1080 x 60i / 59.94i / 50i 1280 x 720 x 60p / 59.94p / 50p 720 x 480 x 60i / 59.94i 720 x 576 x 50i
Record Resolution / Frame Rate / Bit Rate	1920 x 1080 x 60p / 59.94p / 50p, encoding video bit rate from 6Mbps to 20Mbps 1920 x 1080 x 60i / 59.94i / 50i, encoding video bit rate from 6Mbps to 20Mbps 1280 x 720 x 60p / 59.94p / 50p, encoding video bit rate from 4Mbps to 20Mbps 720 x 480 x 60i / 59.94i, encoding video bit rate from 2Mbps to 10Mbps 720 x 576 x 50i, encoding video bit rate from 2Mbps to 10Mbps

◆ Functionality

Multiple Card Support	No

◆ Audio Processing

Audio Compression	MPEG-1 Audio Layer 2
Bit Rate	256k

◆ System Requirement

System	x86 PC compatible computer, Intel® Pentium® 4 2.0GHz or above for video record Recommends using a DXVA or CUDA capable graphics card for real-time video playback
Memory	1GB or more
OS Environment	Microsoft Windows XP Service Pack 2 (SP2) (32-bit version) Microsoft Windows 7 (32-bit/64-bit) Microsoft DirectX 9.0c Microsoft .NET Framework 2.0 Linux: Fedora 16 (Kernel 3.1)

◆ Software Support

Device Driver	Compatible with Windows XP, Windows 7, Linux Kernel 3.1
SDK	Windows: Provides SDK and demo program with sample source code in C# Linux: Provides SDK and driver/demo program with sample source code in C

◆ Others

Dimensions	168 mm x 69 mm
Operating Temperature	0°C ~ 65°C, non-condensing
Power Consumption	6.07 W (12V@0.3A, 3.3V@0.72A)

Packing List

1 x HDC-301E	
1 x Full size bracket	
1 x Utility CD	1 x QIG

Ordering Information

Part No.	Description
HDC-301E-R10	PCI Express video/audio capture card with one HDMI input channel and one HDMI output channel, 1920x1080@60p, and H.264 Hardware Codec

Long Distance High-Definition Compression Solution

Nowadays, more and more equipments are equipped with SDI output for television studios and other broadcasting applications. SDI is a high capacity interface used as a way of exporting uncompressed digital video in real time. That makes it ideal for live feed productions (such as a live TV show), as well as for editing and monitoring video at the highest possible quality. Since SDI is designed primarily for professional use, it is also compatible with a variety of video devices found in broadcast studios, including monitors, tape decks and switchers. SDI exports uncompressed SD and HD video over a coaxial cable.

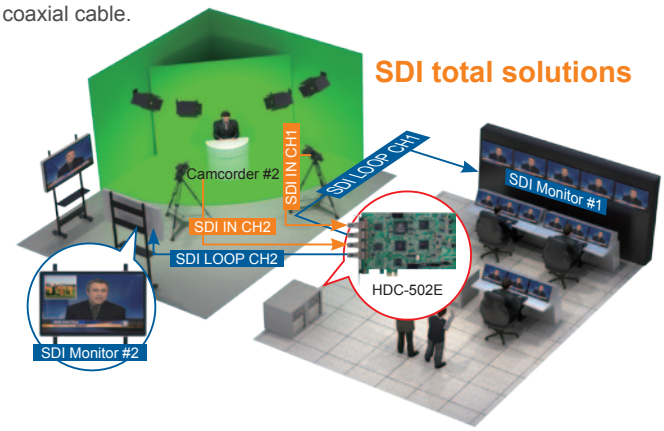

Broadcasting Solutions

H.264 video encoder can be the part of streaming server in the application for broadcasting

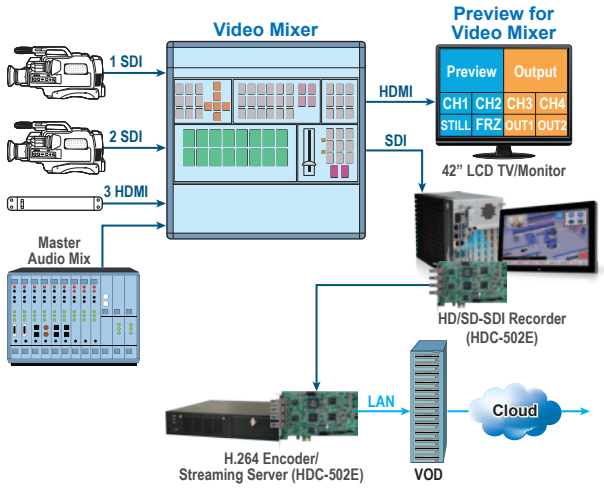

Long Distance and High Quality Capture Card

SDI in studio editing field

SDI (Serial Digital Interface) is a family of video interfaces used for broadcast-grade video. A related standard known as high-definition serial digital interface (HD-SDI) provides a nominal data rate of 1.485 Gbit/s. IEI SDI product HDC-502E is designed with 2 channels SDI input, 2 channels SDI loop and 1 channel SDI output for high quality and long distance signal transmission. It achieves this through a 100 m (HD-SDI)/300 m (SD-SDI) coaxial cable without compression and with no data loss for professional studio, broadcast and transportation video applications.

High definition capturing has become a trend of the industrial surveillance. The HD-CCTV camera with SDI interface provides long distance transmission compared to analog camera and IP camera. The advantage is SDI interface can transmit high-definition 1080p video via coaxial cable instead of network cable. In other words, users can enjoy 1080p HD video over existing analog system without any changes.

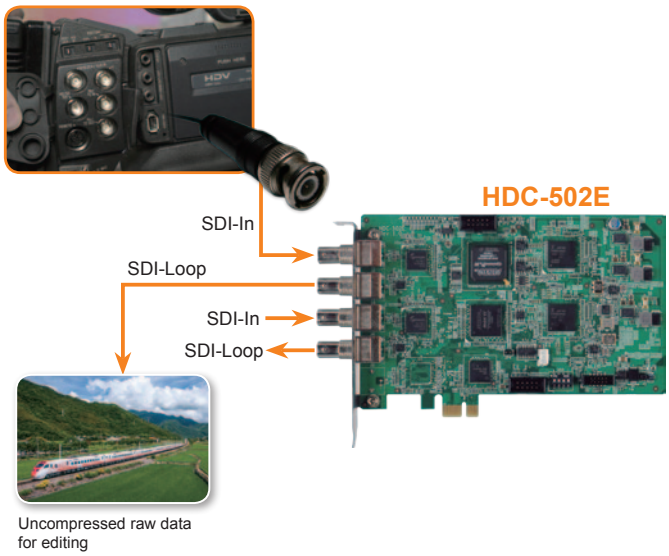

SDI in high quality surveillance field

HD-CCTV1 camera V.S. IP camera

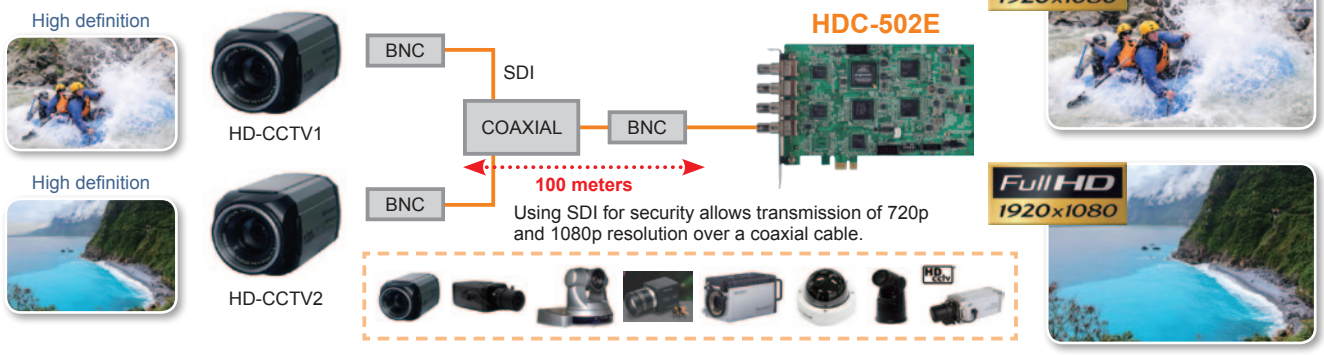

HDC-502E

PCIe video/audio capture card with 2 channel SDI loop inputs, 2 channel SDI loop outputs and H.264 hardware codec up to 1920x1080@60p

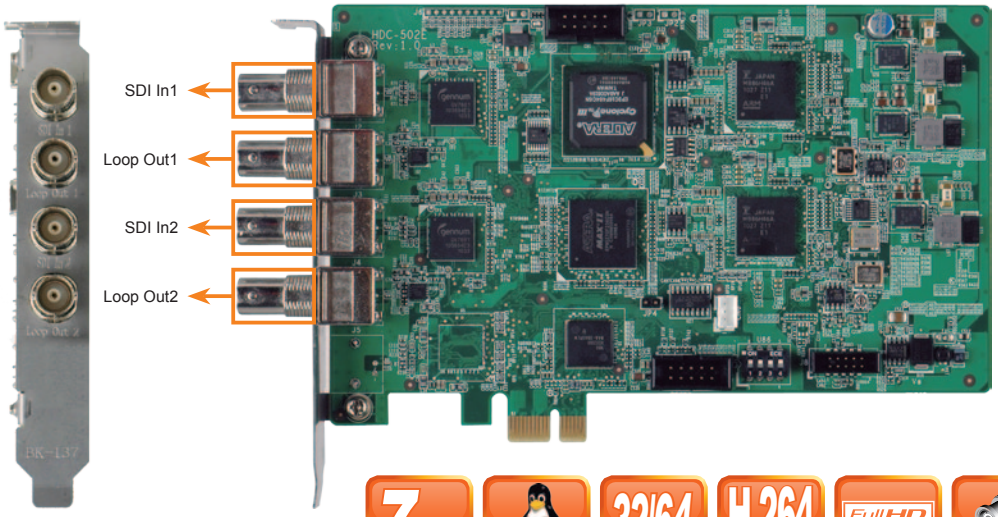

Features

- Compatible with Windows XP, Windows 7 and Linux
- High quality and long distance video compression solution
- Encoding or decoding up to 1080p HD video
- Reduces the amount of hard disk space needed by real-time H.264 recording compression capability
- Applications: professional studio, broadcast and transportation video applications
- SDK available for customer to create customized applications

System Block

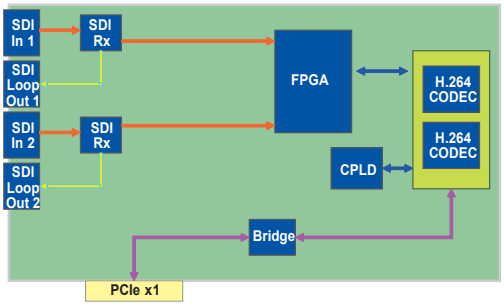

Specifications

◆ Interface

Video Input	2 channels
Video Input Type	SDI
Audio Input	2 channels
Audio Input Type	SDI
Loop Through Output	2 channels
Loop Through Type	SDI
Bus Interface	PCIe x1

◆ Video Processing

Video Compression	H.264/AVC High Profile Level 4.2
Input Resolution & Frame Rate	1920 x 1080 x 60p / 50p / 30p / 25p / 24p 1920 x 1080 x 60i / 50i 1280 x 720 x 60p / 50p / 30p / 25p / 24p 720 x 480 x 60i 720 x 576 x 50i
Record Resolution / Frame Rate / Bit Rate	1920 x 1080 x 60p, encoding video bit rate from 6Mbps to 20Mbps 1280 x 720 x 60p, encoding video bit rate from 4Mbps to 20Mbps

◆ Audio Processing

Audio Compression	MPEG-1 Audio Layer 2
Bit Rate	256k

◆ Functionality

Multiple Card Support	Yes

◆ Software Support

Device Driver	Compatible with Windows XP, Windows 7 and Linux Fedora 16
SDK	Windows: Provides SDK and demo program with sample source code in C# Linux: Provides SDK and driver/demo program with sample source code in C

◆ System Requirement

System	x86 PC compatible computer, Intel® Pentium® 4 2.0GHz or above for video record Recommends using a DXVA or CUDA capable graphics card for real-time video playback
Memory	1GB or more
OS Environment	Microsoft Windows XP Service Pack 2 (SP2) (32-bit version) Microsoft Windows 7 (32-bit/64-bit) Microsoft DirectX 9.0c Microsoft .NET Framework 3.0/3.5/4.0 Visual C++ 2005 & 2008 Redistributable Linux: Fedora 16 (Kernel: 3.1)

◆ Others

Dimensions (WxH) (mm)	188 mm x 125 mm
Operating Temperature	0°C ~ 60°C (32°F ~ 140°F), non-condensing
Power Consumption	14.2W (12V@0.76A, 3.3V@1.52A)

Packing List

1 x HDC-502E capture card
1 x Utility CD
1 x QIG

Ordering Information

Part No.	Description
HDC-502E-R10	PCI Express video/audio capture card with 2 SDI input channels, 2 loop-out channels, 1920x1080@60p, and H.264 Hardware Codec

Uncompressed Video Capture Product Selection Guide

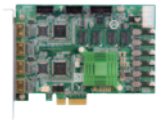

Products	HDB-301R New	HSRC-302E New
◆ Input		
Video Input Channel	1 channel	2 channels
Video Input Type	HDMI	HDMI 1.4a
Audio Input Channel	1 channel	2 channels
Audio Input Type	HDMI (stereo)	HDMI 1.4a (stereo)
◆ No Delay Passthrough		
Video Output Channel	1 channel	2 channels
Video Output Type	HDMI	HDMI 1.4a
Audio Output Channel	1 channel	2 channels
Audio Output Type	HDMI (stereo)	HDMI 1.4a (stereo)
◆ Pc Interface		
Type	USB 3.0	PCIe x4
◆ Video Processing		
Color Space	YUV 4:2:2	RGB / YUV
◆ Video Input Resolution		
Video Input Resolution	1920 x 1080 24p/25p/30p/50p/59.54p/60p 1920 x 1080 60i/59.94i/50i 1280 x 1024 60p 1280 x 720 60p/59.94p/50p 1024 x 768 60p 800 x 600 60p 720 x 576 50p 720 x 480 60p 640 x 480 60p	3840 x 2160 24p/25p/30p 1920 x 1080 24p/25p/30p/50p/60p 1920 x 1080 60i/59.94i/50i 1280 x 720 60p/50p
Video Preview	1920 x 1080 24p/25p/30p/50p/59.54p/60p 1920 x 1080 60i/59.94i/50i 1680 x 1050 60p 1440 x 900 60p 1360 x 768 60p 1280 x 1024 60p 1280 x 800 60p 1280 x 768 60p 1280 x 720 60p/59.94p/50p 1024 x 768 60p 800 x 600 60p 720 x 576 50p 720 x 480 60p 640 x 480 60p	3840 x 2160 24p/25p/30p 1920 x 1080 24p/25p/30p/50p/60p 1920 x 1080 60i/59.94i/50i 1280 x 720 60p/50p
◆ Audio Processing		
Audio Sampling Frequencies	44.1k, 48k Hz	
◆ Functionality		
Multiple Card Support	N/A	2 channels
◆ Others		
Dimensions	105 x 58 x 18 (mm)	155 x 111 (mm)
Operation Tempeture	0°C - 60°C (32°F - 140°F), non-condensing	
Power Consumption	4W	15W
◆ Software Support		
Device Driver	Driver not needed	Windows 7 32-bit Windows 7 64-bit Linux
Sdk	Provide SDK and Demo program	

HDB-301R

USB 3.0 uncompressed video/audio capture box with one HDMI input channel and one HDMI output channel, 1920x1080@60p

New

Machine Vision/Broadcast & Post Production

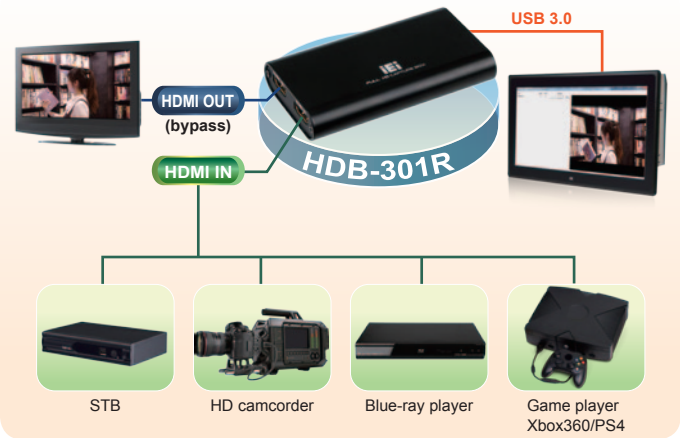

Features

- Equipped with one HDMI input port and one HDMI output port
- Supports for 4:2:2 color spaces to provide the highest quality for your images
- Designed for professional video, machine vision, broadcast & post production industries
- For audio mastering, 24-bit 48kHz audio provides the power you need to integrate into any audio environment
- Works with all DirectShow-compliant software

Dimensions *(Unit: mm)*

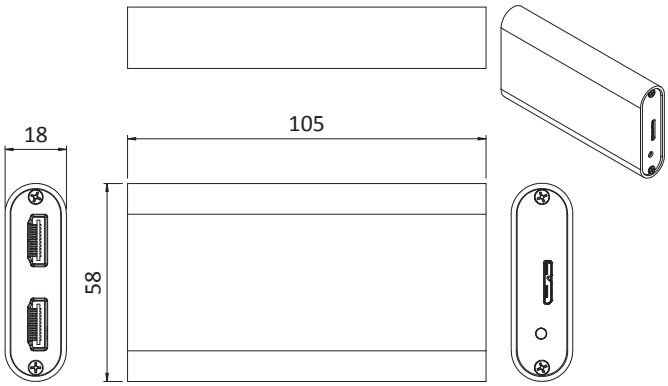

Specifications

◆ Interface

Input	Video input channel	1 channel
	Video input type	HDMI
	Audio input channel	1 channel
	Audio input type	HDMI (stereo)
No Delay HDMI Passthrough	Video output channel	1 channel
	Video output type	HDMI
	Audio output channel	1 channel
	Audio output type	HDMI (stereo)

◆ PC Interface

Type	USB 3.0

◆ Video Processing

Color Space	YUV 4:2:2
Video Input Resolution	1920 x 1080 24p/25p/30p/50p/59.54p/60p 1920 x 1080 60i/59.94i/50i 1280 x 1024 60p 1280 x 720 60p/59.94p/50p 1024 x 768 60p 800 x 600 60p 720 x 576 50p 720 x 480 60p 640 x 480 60p
Video Preview	1920 x 1080 24p/25p/30p/50p/59.54p/60p 1920 x 1080 60i/59.94i/50i 1680 x 1050 60p 1440 x 900 60p 1360 x 768 60p 1280 x 1024 60p 1280 x 800 60p 1280 x 768 60p 1280 x 720 60p/59.94p/50p 1024 x 768 60p 800 x 600 60p 720 x 576 50p 720 x 480 60p 640 x 480 60p

◆ Audio Processing

Audio Sampling Frequencies	44.1k, 48k Hz

◆ System Requirement

System	Intel® Core™ i5-3400 or above
Memory	4GB or more
OS Environment	Microsoft Windows 7/8.1/10 (32-bit/64-bit) Microsoft DirectX 10.0 or above Ubuntu 14.04.3

◆ Software Support

SDK	Provide SDK and demo program

◆ Others

Dimensions	105 mm x 58 mm x 18 mm
Operating Temperature	0°C ~ 60°C (32° ~ 140°F), non-condensing
Power Consumption	4W

Packing List

- 1 x HDB-301R
- 1 x USB 3.0 cable
- 1 x QIG
- 1 x Utility CD

Ordering Information

Part No.	Description
HDB-301R-R10	USB 3.0 Uncompressed video/audio capture box with one HDMI input and one HDMI output,1920x1080@60p

HSRC-302E

PCI Express uncompressed video/audio capture card with two HDMI input channels and two HDMI output channels, 4k@30p, 1920x1080@60p

New

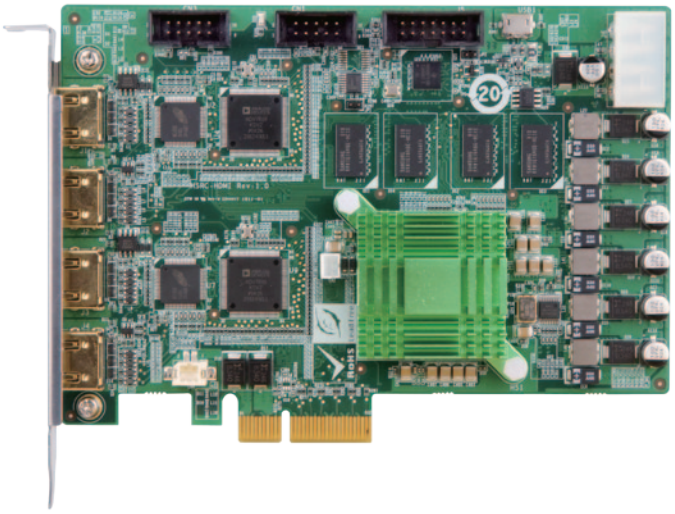

Machine Vision/Broadcast & Post Production

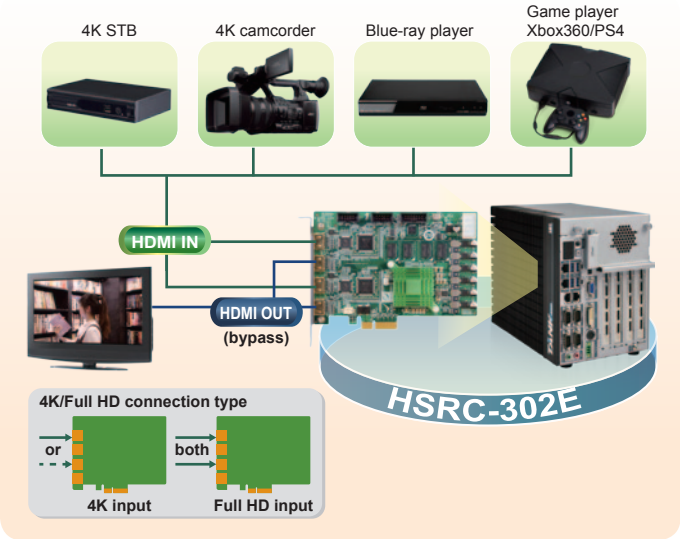

Features

- Equipped with two HDMI input ports and two HDMI output ports
- One HDMI port supports 4K video input
- Supports for 4:2:2 color spaces to provide the highest quality for your images
- Designed for professional video, machine vision, broadcast & post production industries
- For multi-channel audio mastering, 24-bit 48kHz audio provides the power you need to integrate into any audio environment
- Works with all DirectShow-compliant software

Dimensions *(Unit: mm)*

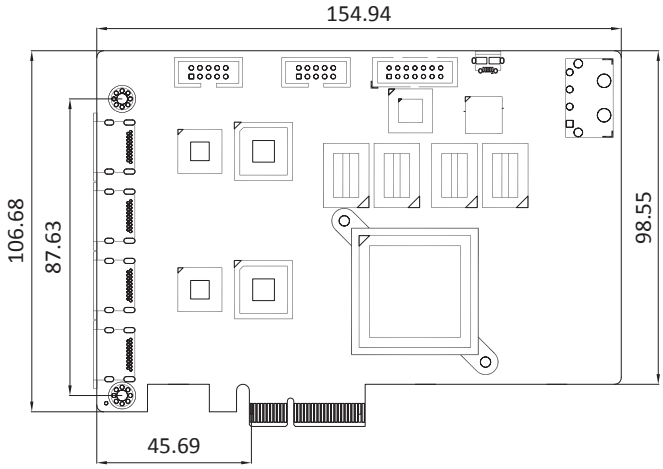

Specifications

◆ Interface

Input	Video input channel	2 channel
	Video input type	HDMI 1.4a
	Audio input channel	2 channel
	Audio input type	HDMI 1.4a (stereo)
No Delay HDMI Passthrough	Video output channel	2 channel
	Video output type	HDMI 1.4a
	Audio output channel	2 channel
	Audio output type	HDMI 1.4a (stereo)

◆ PC Interface

Type	PCIe x4

◆ Video Processing

Color Space	RGB / YUV
Video Input Resolution	3840 x 2160 24p/25p/30p 1920 x 1080 24p/25p/30p/50p/60p 1920 x 1080 60i/59.94i/50i 1280 x 720 60p/50p
Video Preview	3840x2160 24p/25p/30p 1920 x 1080 24p/25p/30p/50p/60p 1920 x 1080 60i/59.94i/50i 1280 x 720 60p/50p

◆ Audio Processing

Audio Sampling Frequencies	44.1k, 48k Hz

◆ Software Support

Device Driver	Microsoft Windows 7 32-bit Microsoft Windows 7 64-bit Ubuntu 14.04.1
SDK	Provide SDK and demo program

◆ Functionality

Multiple Card Support	2 channels

◆ Others

Dimensions	155 mm x 111 mm
Operating Temperature	0°C ~ 60°C, non-condensing
Power Consumption	15W

Packing List

1 x HSRC-302E
1 x QIG
1 x Utility CD

Ordering Information

Part No.	Description
HSRC-302E-R10	PCI Express Uncompressed video/audio capture card with two HDMI inputs and two HDMI outputs,4k@30p,1920x1080@60p

Standard-Definition Software Compression Capture Card Selection Guide

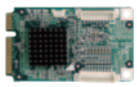

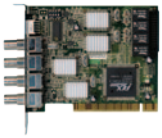

Model Name	IVCME-C604	IVCE-C608	IVCE-C604	IVC-200G-RS	PM-1056
Form Factor	PCIe Mini	PCIe	PCIe	PCI	PCI-104
♦ Interface					
Video Input	4 channels composite video NTSC/PAL auto sensing	8 channels composite video NTSC/PAL auto sensing	4 channels composite video NTSC/PAL auto sensing	4 channels composite video NTSC/PAL/SECAM auto sensing	
Video Input Type	BNC (BNC+RCA to DB-26 cable included)			BNC	BNC
Audio Input	4 channels	8 channels	4 channels	N/A	N/A
Audio Input Type	RCA (BNC+RCA to DB-26 cable included)			N/A	N/A
Bus Interface	Mini PCIe x1	PCIe x1	PCIe x1	PCI Rev. 2.1 compliant	PCI Rev. 2.1 compliant
Alarm I/O	Yes	Yes	Yes	Yes	Yes
Card ID	N/A	Rotate switch selectable with LED for ID indication		DIP switch selectable with LED for ID indication	
LED Indicator	N/A	Red LED for system alarm Green LED for AP running Yellow LED for watchdog		N/A	
♦ Video Processing					
Video Compression	Software compression				
Video Engine	1 x Conexant CX25854	1 x Conexant CX25853	1 x Conexant CX25850	4 x Conexant CX25878	1 x Conexant CX25878
Resolution & Frame Rate	NTSC: 720 x 576 720 x 480 720 x 288 720 x 240 352 x 240 320 x 240 160 x 120 PAL: 720 x 576 720 x 480 720 x 288 720 x 248 352 x 288 352 x 240 320 x 240 160 x 120			NTSC: 720 x 480 720 x 240 640 x 288 352 x 288 320 x 240 240 x 176 160 x 120 88 x 72 720 x 288 640 x 480 640 x 240 352 x 240 240 x 180 176 x 144 128 x 96 80 x 60	PAL/SECAM: 720 x 576 720 x 288 704 x 576 640 x 288 352 x 288 320 x 240 240 x 176 160 x 120 88 x 72 720 x 480 720 x 240 640 x 480 640 x 240 352 x 240 240 x 180 176 x 144 128 x 96 80 x 60
	NTSC: Total 120fps @ D1 for 4 channels PAL: Total 100fps @ D1 for 4 channels	NTSC: Total 240fps @ D1 for 8 channels PAL: Total 200fps @ D1 for 8 channels	NTSC: Total 120fps @ D1 for 4 channels PAL: Total 100fps @ D1 for 4 channels	NTSC: Up to 120fps at all resolutions PAL/SEACAM: Up to 100fps at all resolutions	NTSC: Total 30fps @ D1 for 4 channels PAL/SEACAM: Total 25fps @ D1 for 4 channels
♦ Audio Processing					
Audio Compression	Software compression			N/A	N/A
Sampling Rate	32kHz, 44.1kHz, 48kHz, 96kHz (hardware spec.)			N/A	N/A
Quantization	24-bit (hardware spec.)			N/A	N/A
♦ System Requirement					
System	x86 PC compatible computer	x86 PC compatible computer, PCI Express 1 lane, compatible with 1, 4, 8 and 16 lane PCIe slots		x86 PC compatible computer	
Memory	512MB or above			256MB or above	
Graphics	DirectX compatible VGA card supporting YUV overlay mode			DirectX compatible VGA card supporting YUV overlay mode	
♦ Software Support					
Device Driver	Windows XP/7 Linux Fedora (Kernel 3.1)			Windows 98/SE/ME/2000/XP Linux Kernal 3.1	
SDK	Provides SDK and demo program with source code in C++			Provides SDK and demo program with source code in C++	
♦ Others					
Dimensions	51 mm x 30 mm	111 mm x 102.4 mm	111.23 mm x 102.39 mm	119.91 mm x 106.68 mm	95.89 mm x 90.17 mm
Operating Temperature	0°C ~ 60°C (32°F~140°F), non-condensing				
Power Consumption	1.65W, 3.3V@0.5A	5.3W, 3.3V@1.39A, 12V@0.06A	3.51W, 3.3V@0.9A, 12V@0.045A	15W, 3A@5V (with relay)	3.5W, 0.7A@5V (with relay)